1. APPLICABLE MODELS
適用機種

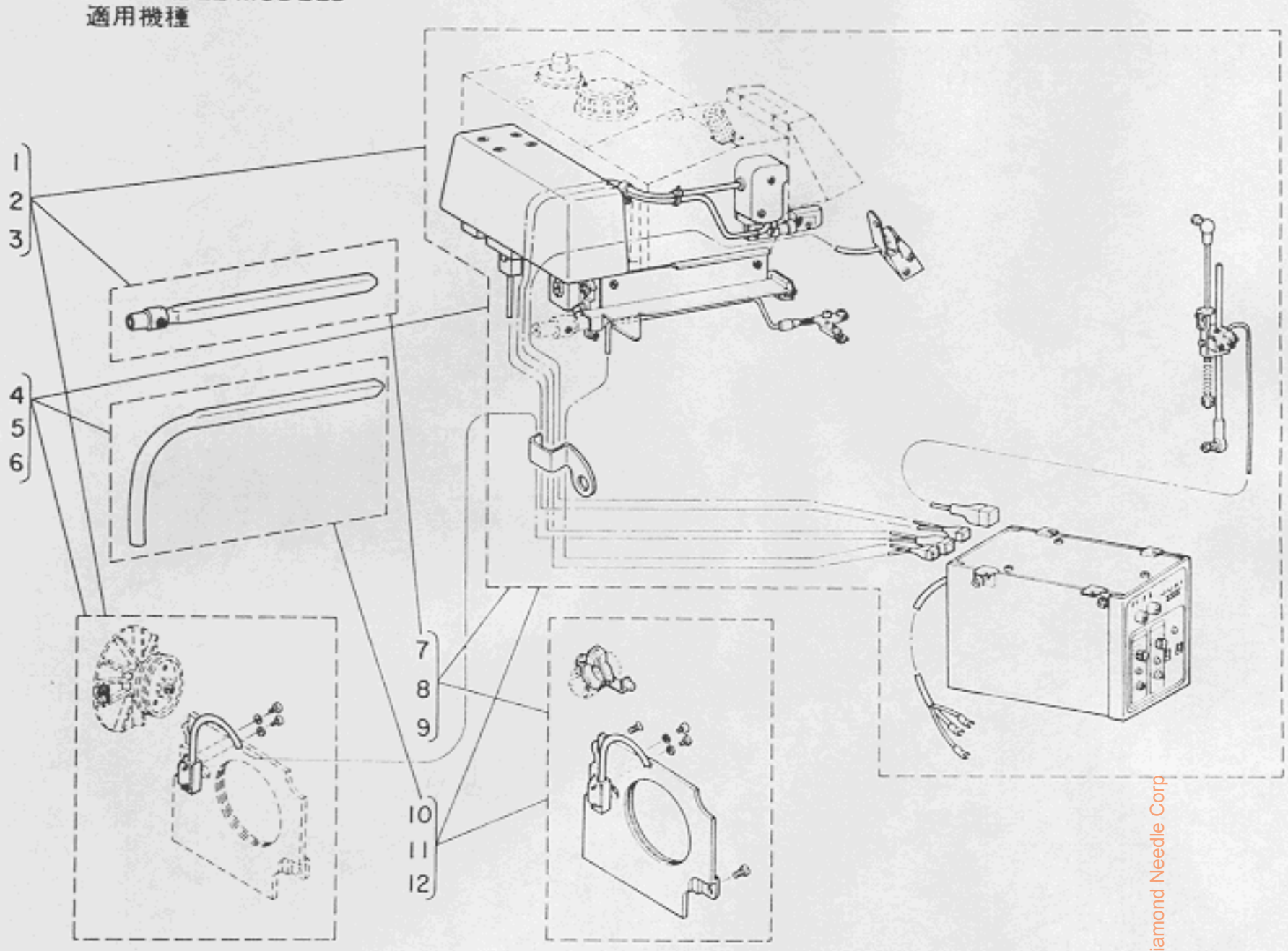

Ref. No.	Note 注記	Part No. 品番	Description	E. C. 変更年月	品名	Amt. Req. 数量
1	◇01	MAT-016001A0	T016 CHAIN-OFF THREAD CUTTER		T016 ｼﾞﾄﾞｰｲﾄｷﾘｰﾁ	1
2	◇02	MAT-016002A0	T016 CHAIN-OFF THREAD CUTTER		T016 ｼﾞﾄﾞｰｲﾄｷﾘｰﾁ	1
3	◇03	MAT-016003A0	T016 CHAIN-OFF THREAD CUTTER		T016 ｼﾞﾄﾞｰｲﾄｷﾘｰﾁ	1
4	◇04	MAT-016001AA	T016 CHAIN-OFF THREAD CUTTER		T016 ｼﾞﾄﾞｰｲﾄｷﾘｰﾁ	1
5	◇05	MAT-016002AA	T016 CHAIN-OFF THREAD CUTTER		T016 ｼﾞﾄﾞｰｲﾄｷﾘｰﾁ	1
6	◇06	MAT-016003AA	T016 CHAIN-OFF THREAD CUTTER		T016 ｼﾞﾄﾞｰｲﾄｷﾘｰﾁ	1
7	◇07	MAT-016004A0	T016 CHAIN-OFF THREAD CUTTER		T016 ｼﾞﾄﾞｰｲﾄｷﾘｰﾁ	1
8	◇08	MAT-016005A0	T016 CHAIN-OFF THREAD CUTTER		T016 ｼﾞﾄﾞｰｲﾄｷﾘｰﾁ	1
9	◇09	MAT-016006A0	T016 CHAIN-OFF THREAD CUTTER		T016 ｼﾞﾄﾞｰｲﾄｷﾘｰﾁ	1
10	◇10	MAT-016004AA	T016 CHAIN-OFF THREAD CUTTER		T016 ｼﾞﾄﾞｰｲﾄｷﾘｰﾁ	1
11	◇11	MAT-016005AA	T016 CHAIN-OFF THREAD CUTTER		T016 ｼﾞﾄﾞｰｲﾄｷﾘｰﾁ	1
12	◇12	MAT-016006AA	T016 CHAIN-OFF THREAD CUTTER		T016 ｼﾞﾄﾞｰｲﾄｷﾘｰﾁ	1

Note (注記)

◇01 ..... For MO-2500 semi-sunken table Control panel (Japanese) 100V, 115V, 200V, 240V
MO-2500 卓上式テーブル コントロールパネル(和文) 100V、115V、200V、240V用

◇02 ..... For MO-2500 semi-sunken table Control panel (English & German) 100V, 115V, 200V, 240V
MO-2500 卓上式テーブル コントロールパネル(英独文) 100V、115V、200V、240V用

◇03 ..... For MO-2500 semi-sunken table Control panel (English & German) 220V, 380V, 415V, 440V
MO-2500 卓上式テーブル コントロールパネル(英独文) 220V、380V、415V、440V用

◇04 ..... For MO-2500 fully-sunken table Control panel (Japanese) 100V, 115V, 200V, 240V
MO-2500 全沈式テーブル コントロールパネル(和文) 100V、115V、200V、240V用

◇05 ..... For MO-2500 fully-sunken table Control panel (English & German) 100V, 115V, 200V, 240V
MO-2500 全沈式テーブル コントロールパネル(英独文) 100V、115V、200V、240V用

◇06 ..... For MO-2500 fully-sunken table Control panel (English & German) 220V, 380V, 415V, 440V
MO-2500 全沈式テーブル コントロールパネル(英独文) 220V、380V、415V、440V用

◇07 ..... For MO-2400 semi-sunken table Control panel (Japanese) 100V, 115V, 200V, 240V
MO-2400 卓上式テーブル コントロールパネル(和文) 100V、115V、200V、240V用

◇08 ..... For MO-2400 semi-sunken table Control panel (English & German) 100V, 115V, 200V, 240V
MO-2400 卓上式テーブル コントロールパネル(英独文) 100V、115V、200V、240V用

◇09 ..... For MO-2400 semi-sunken table Control panel (English & German) 220V, 380V, 415V, 440V
MO-2400 卓上式テーブル コントロールパネル(英独文) 220V、380V、415V、440V用

◇10 ..... For MO-2400 fully-sunken table Control panel (Japanese) 100V, 115V, 200V, 240V
MO-2400 全沈式テーブル コントロールパネル(和文) 100V、115V、200V、240V用

◇11 ..... For MO-2400 fully-sunken table Control panel (English & German) 100V, 115V, 200V, 240V
MO-2400 全沈式テーブル コントロールパネル(英独文) 100V、115V、200V、240V用

◇12 ..... For MO-2400 fully-sunken table Control panel (English & German) 220V, 380V, 415V, 440V
MO-2400 全沈式テーブル コントロールパネル(英独文) 220V、380V、415V、440V用

From the library of: Diamond Needle Corp

2. KNIFE & MAGNET COMPONENTS
メス・マグネット関係

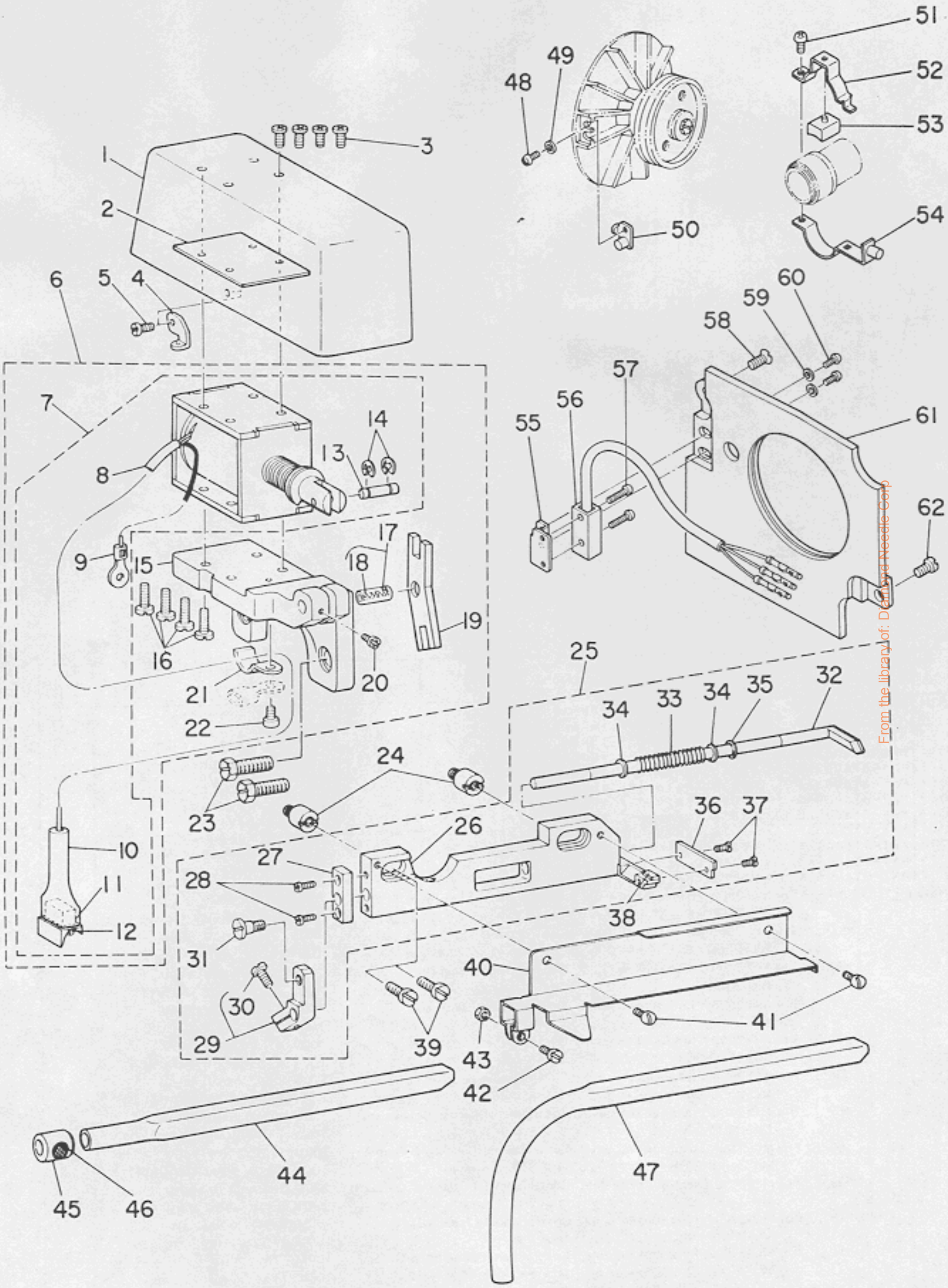

From the library of: Dilabrad Needle Corp

Ref. No.	Note 注記	Part No. 品番	Description	E. C. 変更年月	品名	Amt. Req. 数量
1		MAT-01623000	MAGNET COVER		ｲﾄｷﾘ ﾏｸﾞﾈｯﾄｶﾊﾞｰ	1
2		MAT-81132T00	MAGNET RUBBER COVER		ﾏｸﾞﾈｯﾄ ｶﾊﾞｰ ｺﾞﾑｶﾞﾜ	1
3		SM-4040601-SB	SCREW M4 L=6		ﾅﾍﾞｺﾈｼﾞ M4X0.7 L=6	4
4	◇01	B2526-704-000	LOWER LOOPER THREAD GUIDE		ｼﾀﾙｰﾊﾞ ｲﾄｱﾝﾅｲ	1
5	◇01	SS-6090630-SP	SCREW 9/64-40 L=6		ﾋﾗﾈｼﾞ 9/64-40 L=6	1
6		MAT-016210B0	MAGNET WITH MOUNTING BASE ASM.		ｲﾄｷﾘ ﾏｸﾞﾈｯﾄ ｸﾐ	1
7		MAT-016210A0	MAGNET ASM.		ｲﾄｷﾘﾏｸﾞﾈｯﾄ ｸﾐ	(1)
8		HW-5F18S16-A8	3-CORE CABTYRE CORD		3ｼﾝ ｷﾞﾔﾌﾞﾀｲﾔｺｰﾄﾞ 1M	(1)
9		HP-1A43PGC-12	GROUND WIRE TERMINAL		ｱｰｽﾁｬｸﾀﾝｼ	(1)
10		MAT-81131T00	COVER		6P ﾌﾟﾗｸﾞｶﾊﾞｰ	(1)
11		D6029-555-80A	NYLON PLUG 6P		6P ﾅｲﾛﾝﾌﾟﾗｸﾞ	(1)
12		D6043-555-800	PIN TERMINAL, MALE		ﾋﾟﾝ ﾀｰﾐﾅﾙ ｵｽ	(3)
13		MAT-80114T00	PLUNGER PIN		ﾌﾟﾗﾝｼﾞｬｰ ﾋﾟﾝ	(1)
14		RE-0300000-K0	SNAP RING 3		ﾋｶﾞﾀﾄﾒｳ 3	(2)
15		MAT-01622000	MAGNET MOUNTING BASE		ｲﾄｷﾘ ﾏｸﾞﾈｯﾄﾀﾞｲ	(1)
16		SM-4041001-SB	SCREW M4 L=10		ﾅﾍﾞｺﾈｼﾞ M4X0.7 L=10	(4)
17		B2116-019-0A0	PIN ASM.		ｸﾄﾞｰﾚﾊﾞｰ ﾋﾟﾝ ｸﾐ	(1)
18		CQ-2000000-00	OIL WICK		ｽｼﾝ	(0.2)
19		MAT-00509000	KNIFE DRIVING LEVER		ｸﾄﾞｰﾚﾊﾞｰ	(1)
20		SS-4090615-SP	SCREW 9/64-40 L=6		ﾅﾍﾞﾈｼﾞ 9/64-40 L=6	(1)
21		D2611-555-B0B	CABLE HOLDER B		ｹｰﾌﾞﾙ ﾄﾒｶﾅｸﾞ B	(1)
22		SS-7090850-SP	SCREW 9/64-40 L=8		ﾏﾙﾋﾗﾈｼﾞ 9/64-40 L=8	(1)
23		SS-9151630-CP	SCREW 15/64-28 L=15.5		ﾛｯｶｸﾎﾞﾙﾄ 15/64-28	2
24		MAT-01601000	HINGE SCREW		ﾒｽﾀﾞｲﾄﾘｯｹ ｽﾍﾟｰｻﾈｼﾞ	2
25		MAT-015010A0	KNIFE MOUNTING BASE ASM.		ﾒｽﾀﾞｲ ｸﾐ	1
26		MAT-01501000	KNIFE DRIVING SHAFT MOUNTING BASE		ﾒｽﾀﾞｲ	(1)
27		MAT-80102T00	KINFE DRIVING SHAFT BUSHING		ﾒｽ ｼﾞｸｳｹ	(1)
28		SS-4080610-SP	SCREW 1/8-44 L=6.4		ﾅﾍﾞﾈｼﾞ 1/8-44 L=6.4	(2)
29		MAT-005060A0	KNIFE DRIVING ARM ASM.		ﾒｽｳﾃﾞ ｸﾐ	(1)
30		SS-6090810-SP	SCREW 9/64-40 L= 7.5		ﾋﾗﾈｼﾞ 9/64-40 L=7.5	(1)
31		SD-0500481-TP	HINGE SCREW D= 5 H= 4.8		ﾀﾞﾝﾈｼﾞ D=5 H=4.8	(1)
32		MAT-00504000	DRIVING SHAFT		ﾒｽｼﾞｸ	(1)
33		MAT-80105T00	SPPING		ﾒｽｼﾞｸ ﾊﾞﾈ	(1)
34		WP-0510516-SD	WASHER 5.1X7.5X0.5		ﾋﾗｻﾞｶﾞﾈ 5.1X7.5X0.5	(2)
35		MAT-80106T00	SNAP RING		ﾊﾞﾈ ﾄﾒｳ	(1)
36		MAT-00505000	KNIFE		ﾒｽ	(1)
37		SS-3060410-SP	SCREW 3/32-56 L=4		ﾏﾙﾈｼﾞ 3/32-56 L=4	(2)
38		MAT-81102T00-A	KNIFE STOPPER		ﾒｽｽﾄｯﾊﾟ	1
39		SS-6121010-SP	SCREW 3/16-28 L=10		ﾋﾗﾈｼﾞ 3/16-28 L=10	2
40		MAT-01502000	PIPE COVER		ﾊﾟｲﾌﾟｶﾊﾞｰ	1
41		SS-5090610-SP	SCREW 9/64-40 L=6		ﾄﾗｽﾈｼﾞ 9/64-40 L=6	2
42		SS-6090810-SP	SCREW 9/64-40 L= 7.5		ﾋﾗﾈｼﾞ 9/64-40 L=7.5	1
43		NS-6090310-SP	NUT 9/64-40		ﾛｯｶｸﾅｯﾄ 9/64-40	1
44	◇02	MAT-81104T00	PIPE		ﾊﾟｲﾌﾟ	1
45	◇02	MAT-81105T00	VACUUN ADJUSTING VALVE		ﾊﾞｷｭｰﾑ ﾁｮｰｾﾂﾍﾞﾝ	1
46	◇02	MAT-81106T00	VALVE NET		ﾊﾞｷｭｰﾑ ﾁｮｰｾﾂﾍﾞﾝ ｱﾐ	1
47	◇03	MAT-81104T0B	PIPE (B)		ﾊﾟｲﾌﾟ B	1
48	◇04	SS-4080610-SP	SCREW 1/8-44 L=6.4		ﾅﾍﾞﾈｼﾞ 1/8-44 L=6.4	1
49	◇04	WP-0330500-0E	WASHER 3.3X6X0.5		ﾋﾗｻﾞｶﾞﾈ 3.3X6X0.5	1
50	◇04	MAT-016110A0	MAGNET BASE A ASM.		ｼﾞｼｬｸ ﾄﾘｯｹﾀﾞｲ A	1
51	◇05	SS-4090815-SP	SCREW 9/64-40 L=8		ﾅﾍﾞﾈｼﾞ 9/64-40 L=8	1
52	◇05	MAT-01613000	MAGNET BASE C		ｼﾞｼｬｸ ﾄﾘｯｹﾀﾞｲ C	1
53	◇05	MAT-01614000	STOPPER		ﾏｸﾘﾄﾞﾒ	1
54	◇05	MAT-016120A0	MAGNET BASE B ASM.		ｼﾞｼｬｸ ﾄﾘｯｹﾀﾞｲ B	1
55		MAT-01615000	SWITCH BASE		ﾊﾘｶｽﾞｶｳﾝﾄ ｽｲｯﾁﾄﾘｯｹﾀﾞｲ	1
56		MAT-016610A0	STITCH COUNTING SWITCH ASM.		ﾊﾘｶｽﾞｶｳﾝﾄ SWﾄﾘｯｹﾀﾞｲ ｸﾐ	1
57		SM-4031201-SN	SCREW M3X0.5 L=12		ﾅﾍﾞｺﾈｼﾞ M3X0.5 L=12	2
58	◇05	SS-1110840-SP	SCREW 11/64-40 L=8		ｻﾗﾈｼﾞ 11/64-40 L=8	1
59		WP-0330500-0E	WASHER 3.3X6X0.5		ﾋﾗｻﾞｶﾞﾈ 3.3X6X0.5	2
60		SM-4030601-SN	SCREW M3X0.5 L=6		ﾅﾍﾞｺﾈｼﾞ M3X0.5 L=6	2
61	◇05	118-04804	COOLING FAN PLATE		ﾚｲｷｬｸ ﾌｧﾝｲﾀ	1
62	◇05	SS-7110840-SP	SCREW 11/64-40 L=7.8		ﾏﾙﾋﾗﾈｼﾞ 11/64-40 L=7.8	1

Note (注記)
- ◇01 ..... For safety stitcher — 安全縫用
- ◇02 ..... For semi-sunken table — 半沈式テーブル用
- ◇03 ..... For fully-sunken table — 全沈式テーブル用
- ◇04 ..... For MO-2500 — MO-2500用
- ◇05 ..... For MO-2400 — MO-2400用

From the library of: Diamond Needle Corp

3. SENSOR & TENSION RELEASE MAGNET COMPONENTS
センサー・糸ゆるめマグネット関係

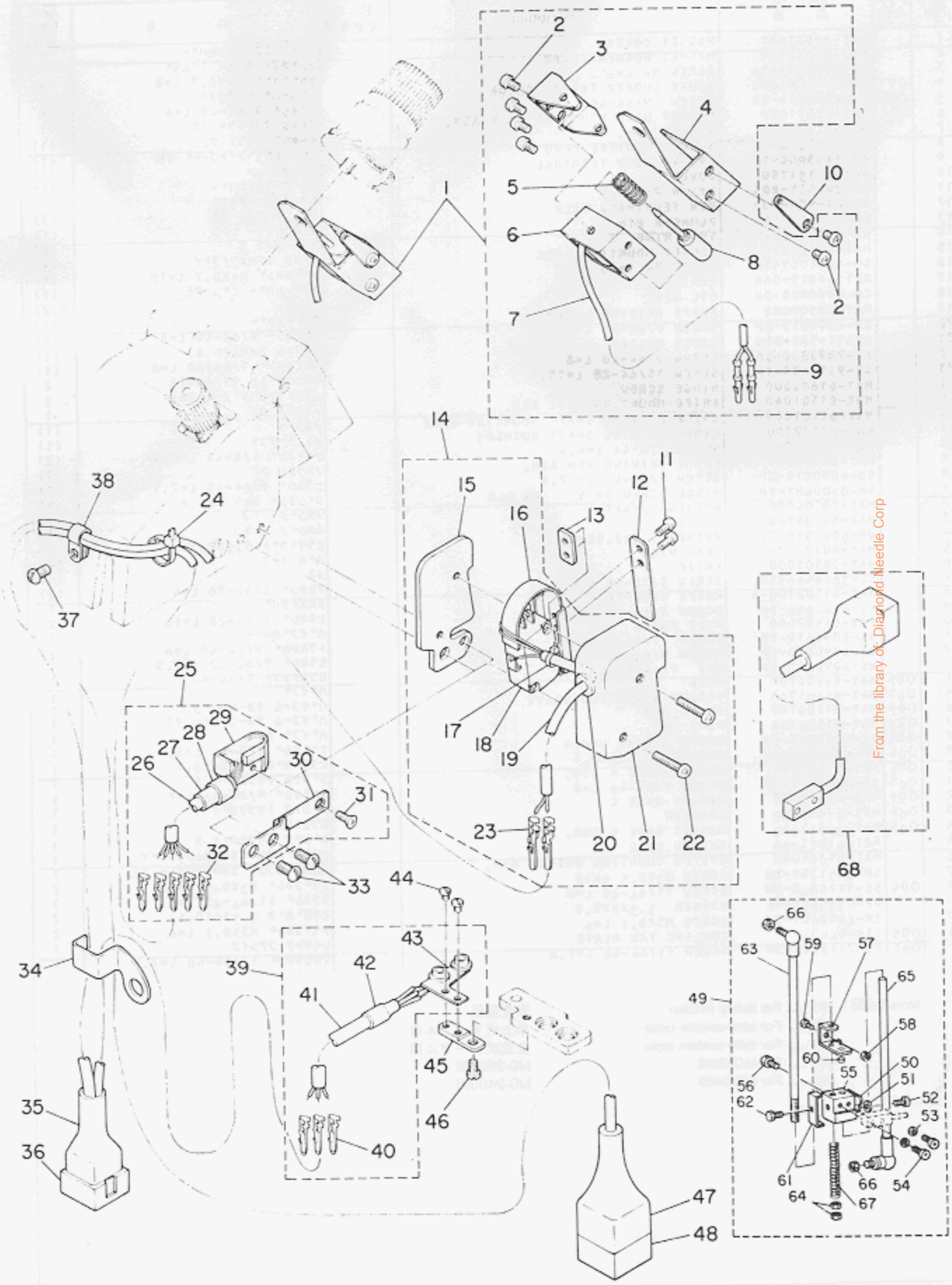

From the library of: Diamond Needle Corp

Ref. No.	Note 注記	Part No. 品番	Description	E. C. 変更年月	品名	Amt. Req. 数量
1		MAT-016310A0	TENSION RELEASE MAGNET ASM.		ｲﾄｷﾘ ﾏｸﾞﾈｯﾄ ｸﾐ	1
2		SM-4030401-SC	SCREW M3X0.5 L=4		ﾅﾍﾞｺﾈｼﾞ M3X0.5 L=4	(6)
3		MAT-81125T00-A	TENSION RELEASING MAGNET COVER		ｲﾄﾕﾙﾒﾏｸﾞﾈｯﾄｶﾊﾞｰ	(1)
4		MAT-01632000	TENSION RELEASE MAGNET BASE		ｲﾄﾕﾙﾒ ﾏｸﾞﾈｯﾄﾀﾞｲ	(1)
5		MAT-81124T00-A	SPRING		ｲﾄﾕﾙﾒﾏｸﾞﾈｯﾄﾊﾞﾈ	(1)
6		MAT-01631000	TENSION RELEASE MAGNET		ｲﾄﾕﾙﾒﾏｸﾞﾈｯﾄ	(1)
7		HW-5L12S22-28	CABTYRE CORD		ﾗﾝﾌﾟｺｰﾄﾞ	(1.2)
8		MAT-81123T00-A	TENSION RELEASING PLUNGER		ｲﾄﾕﾙﾒﾌﾟﾗﾝｼﾞｬｰ	(1)
9		D6043-555-B00	PIN TERMINAL, MALE		ﾋﾟﾝ ﾀｰﾐﾅﾙ ｵｽ	(2)
10	◇01	MAT-01633000	THREAD GUIDE		ｲﾄﾕﾙﾒ ｲﾄｱﾝﾅｲ	1
11	◇02	SM-4860501-SC	SCREW M2.6 L=5		ﾅﾍﾞｺﾈｼﾞ M2.6 L=5	2
12	◇02	MAT-01662000	SWITCH PUSH AUXILIARY PLATE		ﾌﾟｯｼｭ ﾎｼﾞｮｲﾀ	1
13	◇02	MAT-01663000	PUSH AUXILIARY REAR PLATE		ﾌﾟｯｼｭ ﾎｼﾞｮｲﾀ ｳﾗｲﾀ	1
14		MAT-016510A0	SWITCH ASM.		ｲﾄｷﾘ ｽｲｯﾁ ｸﾐ	1
15		MAT-01652000	SWITCH INSTALLING PLATE		ｲﾄｷﾘ ｽｲｯﾁﾄﾘﾂｹｲﾀ	(1)
16		MAT-01653000	SWITCH PUSH PLATE		ﾌﾟｯｼｭｲﾀ	(1)
17		EA-9500B01-00	CLIP CV-100		ｹﾌﾞｿｸﾊﾞﾝﾄﾞ	(1)
18		MAT-80120T00	MICRO-SWITCH		ﾏｲｸﾛｽｲｯﾁ	(1)
19		HW-5L12S22-28	CABTYRE CORD		ﾗﾝﾌﾟｺｰﾄﾞ	(1.3)
20		HX-0005500-00	RUBBER BUSHING		ｺﾞﾑﾌﾞｯｼｭ	(1)
21		MAT-01651000	SWITCH COVER		ｲﾄｷﾘ ｽｲｯﾁｶﾊﾞｰ	(1)
22		SM-4031401-SC	SCREW M3X0.5 L=14		ﾅﾍﾞｺﾈｼﾞ M3X0.5 L=14	(2)
23		HK-0125300-00	PIN-SHAPE TERMINAL, MALE		ﾋﾟﾝﾀｰﾐﾅﾙ (ｵｽ)	(2)
24		EA-9500B01-00	CLIP CV-100		ｹﾌﾞｿｸﾊﾞﾝﾄﾞ	1
25		MAT-016460A0	LIGHT RECEIVING ELEMENT ASM.		ｼﾞｽｺｰｾﾝｻ ｸﾐ	1
26		HW-0001400-50	CABTYRE CORD		5ｼﾝｹｰﾌﾞﾙ	(1.3)
27		E9862-201-000	TUBE		ﾋｰﾄｼｭﾘﾝｸﾁｭｰﾌﾞ	(0.1)
28		E9616-403-000	RHOMBIC TUBE		ﾋｼﾁｭｰﾌﾞ B	(0.1)
29		MAT-016440A0	LIGHT RECEIVING ELEMENT ASM.		ｼﾞｽｺｳｿｼ ｸﾐ	(1)
30		MAT-01646000	LIGHT RECEIVING ELEMENT BASE		ｼﾞｽｺｳｿｼ ﾄﾘﾂｹﾀﾞｲ	(1)
31		SM-2860601-SC	SCREW M2.6 L=6		ﾏﾙﾅﾍﾞﾗｺﾈｼﾞ	(1)
32		HK-0126300-00	PIN-SHAPE TERMINAL, MALE		ﾋﾟﾝﾀｰﾐﾅﾙ (ｵｽ)	(5)
33		SS-3090710-TP	SCREW 9/64-40 L=7		ﾏﾙﾈｼﾞ 9/64-40 L=7	2
34		MAT-81129T00	CORD COVER		ｺｰﾄﾞｶﾊﾞｰ	1
35		MAT-01647000	9-POLE PLUG COVER		ﾅｲﾛﾝ ﾌﾟﾗｸﾞｶﾊﾞｰ	1
36		HK-0126000-90	9-POLE PLUG		ﾅｲﾛﾝﾌﾟﾗｸﾞ	1
37		SS-3090710-TP	SCREW 9/64-40 L=7		ﾏﾙﾈｼﾞ 9/64-40 L=7	1
38		G5066-110-000	CORD HOLDER		3ﾏﾙ ﾖｰ ｹｰﾌﾞﾙｵｻｴ	1
39		MAT-016410A0	LIGHT EMITTING DIODE ASM.		ﾊｯｺｳ ｾﾝｻ ｸﾐ	1
40		HK-0126300-00	PIN-SHAPE TERMINAL, MALE		ﾋﾟﾝﾀｰﾐﾅﾙ (ｵｽ)	(3)
41		HW-0001200-30	CABTYRE CORD		3ｼﾝｹｰﾌﾞﾙ	(1.3)
42		E9862-201-000	TUBE		ﾋｰﾄｼｭﾘﾝｸﾁｭｰﾌﾞ	(0.1)
43		MAT-016430A0	LIGHT EMITTING DIODE ASM.		ﾊｯｺｳｿｼ ｸﾐ	(1)
44		SS-5060310-SP	SCREW 3/32-56 L=2.8		ﾄﾗｽﾈｼﾞ 3/32-56 L=2.8	2
45		MAT-01602000	CIRCUIT BOARD BASE		ﾊｯｺｳｿｼ ｷﾊﾞﾝﾀﾞｲ	1
46		SS-7080520-SP	SCREW 1/8-44 L=4.9		ﾏﾙﾋﾗﾈｼﾞ 1/8-44 L=4.9	1
47		MAT-81131T00	COVER		6P ﾌﾟﾗｸﾞｶﾊﾞｰ	1
48		D6028-555-B0A	9-POLE PLUG, WHITE		9P ﾅｲﾛﾝﾌﾟﾗｸﾞ ｼﾛ	1
49		MAT-012660A0	CONNECTING ROD ASM.		ﾚﾝｹﾂﾎﾞｰ ｸﾐ	1
50		B3538-112-000	CORD HOLDER		ｵﾂｴｶﾅｸﾞ	(1)
51		WP-0330501-SB	WASHER M3		ﾋﾗｻﾞｶﾞﾈ ﾐｶﾞｷﾏﾙ M3	(1)
52		SM-4030411-SB	SCREW M3X0.5 L=4		ﾅﾍﾞｺﾈｼﾞ	(1)
53		WP-0330500-MB	WASHER 3.3X6X0.5		ﾋﾗｻﾞｶﾞﾈ ｺｶﾞﾀﾏﾙ M3	(2)
54		SM-4031201-SB	SCREW M3 L=12		ﾅﾍﾞｺﾈｼﾞ M3X0.5 L=10	(2)
55		MAT-81133T00	SAFETY SWITCH INSTALLING BASE		ｱﾝｾﾞﾝ ｽｲｯﾁ ﾄﾘﾂｹﾀﾞｲ	(1)
56		SM-9060813-SE	SCREW M6 L=8		ﾛｯｶｸﾎﾞﾙﾄ M6 L=8	(1)
57		MAT-81134T00	MAGNET MOUNTING BASE		ｼﾞｼｬｸ ﾄﾘﾂｹﾀﾞｲ	(1)
58		NM-6080721-SE	NUT M8		ﾛｯｶｸﾅｯﾄ M8	(1)
59		SM-9081423-SE	SCREW M8 L=14		ﾛｯｶｸﾎﾞﾙﾄ M8 L=14	(1)
60		MAT-01266000	MAGNET		ｱﾝｾﾞﾝｽｲｯﾁ ｼﾞｼｬｸ	(1)
61		MAT-81136T00	STOPPER		ｼﾞｼｬｸ ﾄﾘﾂｹﾀﾞｲ ｽﾄｯﾊﾟｰ	(1)
62		SM-9060813-SE	SCREW M6 L=8		ﾛｯｶｸﾎﾞﾙﾄ M6 L=8	(1)
63		MAT-81137TA0	JOINT BAR ASM. B		ﾚﾝｹﾂﾎﾞｰﾙ B ｸﾐ	(1)
64		NM-6060003-SC	NUT M6		ﾛｯｶｸﾅｯﾄ M6 3ｼｭ	(2)
65		D7117-555-BA0	JOINT ASM.		ﾚﾝｹﾂﾎﾞｰﾙ ｸﾐ	(1)
66		NM-6060001-SE	NUT M6		ﾛｯｶｸﾅｯﾄ M6 1ｼｭ	(2)
67		D7130-555-B0A	SPRING		ﾚﾝｹﾂﾎﾞｰﾙ ﾊﾞﾈ	(1)
68		MAT-016610B0	PEDAL SWITCH ASM.		ﾍﾟﾀﾞﾙｽｲｯﾁ ｿｰｸﾐ	1

Note (注記) ◇01 ..... For two-needle overedger and safety stitcher
◇02 ..... Accessory part

2本針オーバーロック、安全縫用
付属品

From the library of: Diamond Needle Corp

4. CONTROL BOX COMPONENTS (1)
コントロール　ボックス関係(1)

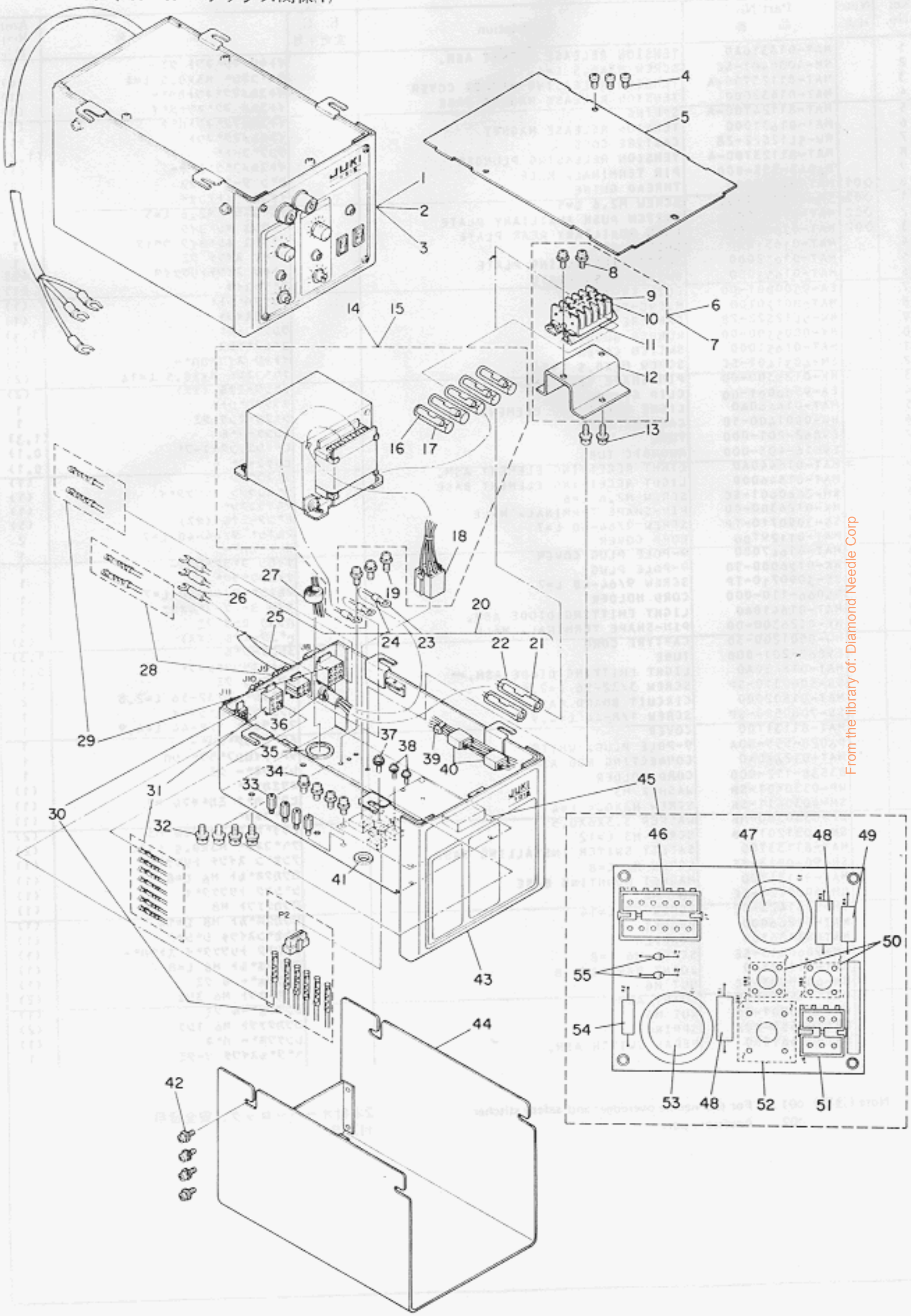

From the library of: Diamond Needle Corp

Ref. No.	Note 注記	Part No. 品番	Description	E. C. 変更年月	品名	Amt. Req. 数量
1	◇01	M0001-140-AA0	CONTROL BOX ASM, A		MC-400 カンセイヒン A	1
2	◇02	M0001-140-BA0	CONTROL BOX ASM, B		MC-400 カンセイヒン B	1
3	◇03	M0001-140-CA0	CONTROL BOX ASM, C		MC-400 カンセイヒン C	1
4		SM-4030601-SF	SCREW M3X0.5 L=6		ナベコネジ M3X0.5 L=6	3
5		M1003-140-000	CONTROL BOX TOP COVER		コントロール ボックス フタ	1
6	◇04	M8502-140-AA0	TERMINAL BASE ASM, A		タンシタイ A クミ	1
7	◇05	M8502-140-BA0	TERMINAL BASE ASM, B		タンシタイ B クミ	1
8		SL-4031081-SF	SCREW M3 L=10		ナベコネジ セムス M3 L=10	(2)
9	◇04	M2004-140-A00	VOLTAGE INDICATION PLATE A		ダンアツタツフ ヒヨウシバン A	(1)
10	◇05	M2004-140-B00	VOLTAGE INDICATION PLATE B		ダンアツタツフ ヒヨーシイタ B	(1)
11		HK-0126500-50	TERMINAL BASE		タンシタイ 5P	(1)
12		M2005-140-000	TERMINAL BASE BRACKET		タンシタイ トリツケイタ	(1)
13		SL-4030881-SF	SCREW M3 L=8		ナベコネジ セムス M3 L=8	2
14	◇04	M8501-140-AA0	TRANSFORMER ASM, A		トランス A クミ	1
15	◇05	M8501-140-BA0	TRANSFORMER ASM, B		トランス B クミ	1
16		HP-0012800-00	CONNECTOR		ファストンタンシ	(5)
17		HP-0012900-00	SLEEVE		スリーブ	(5)
18		E9611-452-000	6-POLE PLUG HOUSING		6P プラグ	(1)
19		SL-4030881-SF	SCREW M3 L=8		ナベコネジ セムス M3 L=8	3
20		M8513-140-0A0	POWER SOURCE CORD ASM.		ダンゲンコード クミ	1
21		HP-0012800-00	CONNECTOR		ファストンタンシ	(2)
22		HP-0012900-00	SLEEVE		スリーブ	(2)
23		HP-1A43PGC-12	GROUND WIRE TERMINAL		アシチャクタンシ	(1)
24		MAT-80158T00	GROUND WIRE MARK TUBE		アースマーク チューブ	(1)
25		E9649-302-000	POWER INPUT CORD		キヤブタイヤコード 3シン	(1.7)
26		HP-1B43PEC-13	SOLDERLESS TERMINAL		アシチャクタンシ Yカタ	(3)
27		HN-0000500-00	RING CORE B		リングコア B	1
28		M8516-140-0A0	CONNECTOR CORD ASM, J9		J9コネクタコード クミ	1
29		M8514-140-0A0	CONNECTOR CORD ASM, J8		J8 コネクタコード クミ	1
30		M8522-140-0A0	CONNECTOR CORD ASM, P2-J11		P2-J11 コネクタコード クミ	1
31		M8519-140-0A0	CONNECTOR CORD ASM, J10		J10コネクタコード クミ	1
32		SL-4040881-SF	SCREW M4 L=8		ナベコネジ セムス M4 L=8	4
33		HX-0005600-0A	SPACER B		スペーサー B	4
34		SL-4030881-SF	SCREW M3 L=8		ナベコネジ セムス M3 L=8	4
35		HX-0005500-0B	RUBBER BUSHING B		ゴム ブッシュ B	1
36		HX-0002100-00	CORD BUSHING		コードブッシュ	1
37		SL-4031281-SF	SCREW M3 L=12		セムスネジ M3 L=12	1
38		SL-4851481-SF	SCREW M2.5 L=14		ナベコネジ セムス M2.5 L=14	2
39		EA-9500B01-00	CLIP CV-100		ケツソクバンド	18
40		GBR-01233000	BRANCH CONNECTOR		シセン コネクタ	2
41		HX-0005500-0A	RUBBER BUSHING A		ゴム ブッシュ A	1
42		SL-4030891-SC	SCREW M3 L=8		ナベコネジ セムス M3 L=8	4
43		M1001-140-000	CONTROL BOX		コントロール ボックス	1
44		M1002-140-000	CONTROL BOX COVER		コントロール ボックス カバー	1
45		M8602-140-0A0	POWER SOURCE BOARD ASM.		ダンゲンキバン クミ	1
46		E9683-901-000	12-POLE PIN HEADER		ピンヘッダ アッセンブリ (12P)	(1)
47		HC-0114068-20	CAPACITOR 6800MF 25V		コンデンサ 6800UF 25V	(1)
48		HR-0043020-S0	RESISTOR 0.2 OHM 2W		テイコウキ 0.2オーム(+-1%) 2W	(2)
49		HR-0042062-10	RESISTOR 620 OHM 2W		テイコウキ 620オーム 2W	(1)
50		HG-0015400-00	DIODE BRIDGE (S2VB20)		ダイオード (S2VB20)	(2)
51		HK-0124000-60	6-POLE PIN HEADER		ピンヘッダー 6P	(1)
52		HG-0024700-00	DIODE BRIDGE (S5VB20)		セイリユウスタック S5VB20	(1)
53		HC-0115047-20	CAPACITOR 4700MF 63V		コンデンサ 4700UF 63V	(1)
54		HR-0042030-20	RESISTOR 3 KILO OHM 2W		テイコーキ 3K 2W キンゾクセマク	(1)
55		HG-2672011-2P	DIODE (VO6C)		ダイオード (VO6C)	(2)

Note (注記)
- ◇01 ..... For Control panel (Japanese) 100V, 115V, 200V, 240V — 和文パネル 100V、115V、200V、240V用
- ◇02 ..... For Control panel (English & German) 100V, 115V, 200V, 240V — 英独文パネル 100V、115V、200V、240V用
- ◇03 ..... For Control panel (English & German) 220V, 380V, 415V, 440V — 英独文パネル 220V、380V、415V、440V用
- ◇04 ..... For 100V, 115V, 200V, 240V — 100V、115V、200V、240V用
- ◇05 ..... For 220V, 380V, 415V, 440V — 220V、380V、415V、440V用

From the library of: Diamond Needle Corp

5. CONTROL BOX COMPONENTS (2)
コントロール　ボックス関係(2)

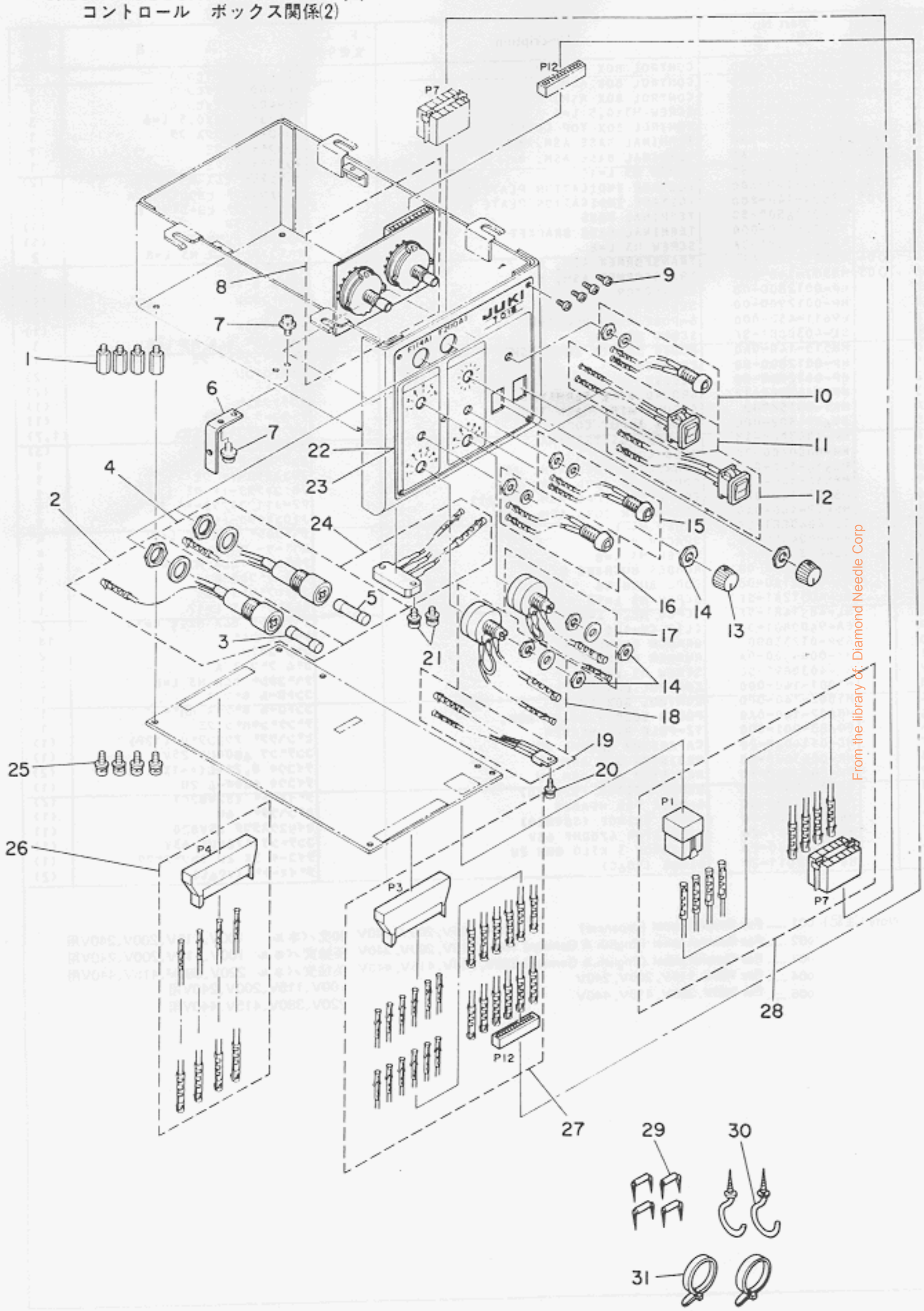

From the library of: Diamond Needle Corp

Ref. No.	Note 注記	Part No. 品番	Description	E. C. 変更年月	品名	Amt. Req. 数量
1		HX-0005600-00	SPACER A		ｽﾍﾟｰｻｰ A	4
2		M8509-140-0A0	FUSE ASH. F1		ﾋｭｰｽﾞ F1 ｸﾐ	1
3		E9602-701-000	FUSE 4A		ｶﾞﾗｽｶﾝ ﾋｭｰｽﾞ	(1)
4		M8510-140-0A0	FUSE ASH. F2		ﾋｭｰｽﾞ F2 ｸﾐ	1
5		E8523-304-000	FUSE 10A		ｶﾞﾗｽｶﾝ ﾋｭｰｽﾞ	(1)
6		M2006-140-000	CORE BRACKET		ｺｱﾄﾞﾒ ｶｲｸﾞ	1
7		SM-4030601-SF	SCREW M3X0.5 L=6		ﾅﾍﾞﾈｼﾞ M3X0.5 L=6	2
8		M8603-140-0A0	ROTARY SWITCH BOARD ASH.		ﾛｰﾀﾘｰｽｲｯﾁ ﾎﾊﾞﾝ ｸﾐ	1
9		SM-4860501-SC	SCREW M2.6 L=5		ﾅﾍﾞﾈｼﾞ M2.6 L=5	4
10		M8506-140-0A0	POWER LAMP ASH.		ﾃﾞﾝｹﾞﾝﾗﾝﾌﾟｸﾐ	1
11		M8504-140-0A0	AUTO/MANUAL SWITCH ASH.		ｽｲｯﾁ (1) ｸﾐ	1
12		M8505-140-0A0	ONCE/TWICE SWITCH ASH.		ｽｲｯﾁ (2) ｸﾐ	1
13		HX-0005400-00	KNOB		ﾛｰﾀﾘｰ ｽｲｯﾁ ﾂﾏﾐ	2
14		NM-6092519-SN	NUT M9		ﾛｯｶｸﾅｯﾄ M9X0.75 1ｼｭ	4
15		M8508-140-0A0	FINISH SENSOR LAMP ASH.		ｾﾝｻﾗﾝﾌﾟ (2) ｸﾐ	1
16		M8507-140-0A0	START SENSOR LAMP ASH.		ｾﾝｻﾗﾝﾌﾟ (1) ｸﾐ	1
17		M8521-140-0A0	FINISH SENSOR VOLUME ASH.		ﾎﾞﾘｭｰﾑ (2) ｸﾐ	1
18		M8520-140-0A0	START SENSOR VOLUME ASH.		ﾎﾞﾘｭｰﾑ (1) ｸﾐ	1
19		M8512-140-0A0	TRANSISTOR ASH. Q5		ﾄﾗﾝｼﾞｽﾀ Q5 ｸﾐ	1
20		SL-4030881-SF	SCREW M3 L=8		ﾅﾍﾞﾈｼﾞ ｾﾑｽ M3 L=8	1
21		SL-4031081-SF	SCREW M3 L=10		ﾅﾍﾞﾈｼﾞ ｾﾑｽ M3 L=10	2
22	◇01	M2001-140-A00	CONTROL PANEL		ｺﾝﾄﾛｰﾙ ﾊﾟﾈﾙ	1
23	◇02	M2001-140-B00	CONTROL PANEL		ｺﾝﾄﾛｰﾙ ﾊﾟﾈﾙ	1
24		M8511-140-0A0	TRANSISTOR ASH. Q4		ﾄﾗﾝｼﾞｽﾀ Q4 ｸﾐ	1
25		SL-4030881-SF	SCREW M3 L=8		ﾅﾍﾞﾈｼﾞ ｾﾑｽ M3 L=8	4
26		M8518-140-0A0	CONNECTOR CORD ASH. P4		P4ｺﾈｸﾀｺｰﾄﾞ ｸﾐ	1
27		M8517-140-0A0	CONNECTOR CORD ASH. P3-P12		P3-P12ｺﾈｸﾀｺｰﾄﾞ ｸﾐ	1
28		M8515-140-0A0	CONNECTOR CORD ASH. P7-P1		P7-P1ｺﾈｸﾀｺｰﾄﾞ ｸﾐ	1
29		MA0-11532000	STAPLE		ｺｰﾄﾞ ｽﾃｰﾌﾟﾙ	4
30		MAT-81163T00	CORD HOLDER		ｺｰﾄﾞｶｹﾞ	2
31		EA-9500B01-00	CLIP CV-100		ｹﾂｿｸﾊﾞﾝﾄﾞ	2

Note (注記) ◇01 .....Control panel (Japanese) コントロールパネル(和文)
◇02 .....Control panel (English & German) コントロールパネル(英独文)

From the library of: Diamond Needle Corp

6. CPU PRINTED CIRCUIT BOARD COMPONENTS
CPU基板関係

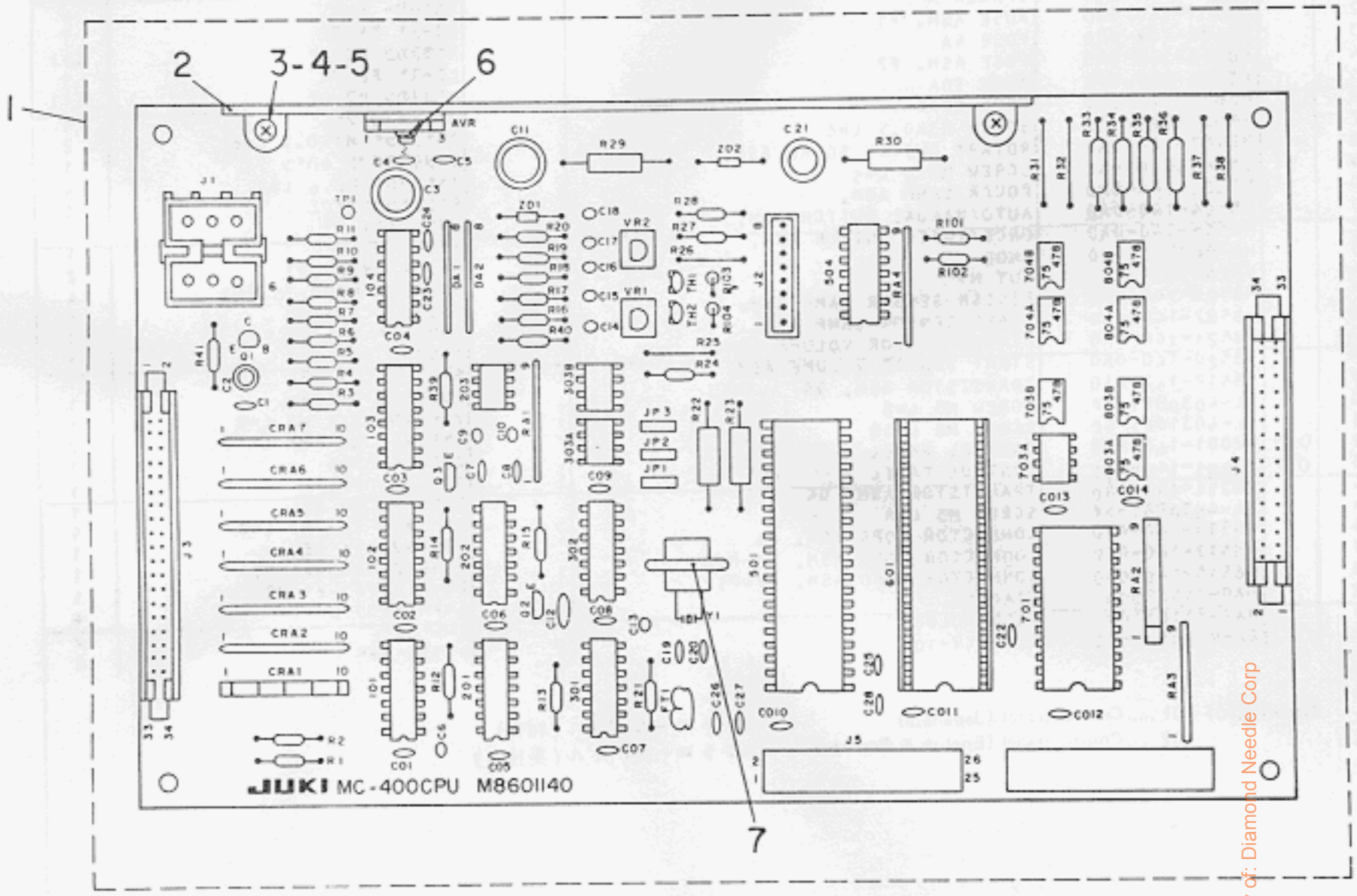

Ref. No.	Note 注記	Part No. 品番	Amt. Req. 数量	Code 記号
1		M8601-140-0A0	1	
2		M2003-140-000	(1)	
3		SL-4031081-SF	(2)	
4		WP-0320500-SC	(2)	
5		NM-6030001-SF	(2)	
6		SL-4030881-SF	(1)	
7		HW-2003500-00	(0,1)	
8		HT-0006600-00	(2)	VR1, VR2
9		HK-0124000-60	(1)	J1
10		HK-0038100-80	(1)	J2
11		E9632-252-F00	(2)	J3, J4
12		HL-0012700-00	(1)	101
13		HL-0045200-00	(2)	102, 103
14		HL-0009100-00	(1)	104
15		HL-0012200-00	(1)	201
16		HL-0056500-00	(1)	202
17		HL-0058100-00	(2)	203, 303A
18		HL-0012800-00	(1)	301
19		HL-0044200-00	(1)	302
20		HL-0056700-00	(1)	303B
21		HR-0130046-10	(2)	TH1, TH2
22		HL-0058200-00	(1)	501
23		HL-0056600-00	(1)	504
24		HL-0057800-01	(1)	601
25		HL-0056900-00	(1)	701
26		HL-0056800-00	(1)	703A
27		HG-0023700-00	(2)	DA1, DA2
28		HL-0058300-00	(1)	AVR
29		HT-0003700-00	(1)	Q1
30		HT-0022200-00	(2)	Q2, Q3
31		HG-0019600-00	(1)	ZD1
32		HG-0006100-00	(1)	ZD2
33		HR-0132010-30	(1)	RA1
34		HR-0132047-20	(1)	RA3
35		HR-0132015-30	(1)	RA4
36		HL-0051400-00	(6)	CRA2 - CRA7
37		HY-0000900-00	(1)	Y1

Ref. No.	Note 注記	Part No. 品番	Amt. Req. 数量	Code 記号
38		HC-0068122-30	(1)	FT1
39		HC-0054600-00	(24)	C01 – C014, C1, C4, C5 C7, C8, C22, C25 – C28
40		EA-9514B03-00	(1)	TP1
41		HC-0111033-00	(1)	C2
42		HC-0111010-10	(2)	C3, C21
43		HC-0011700-00	(1)	C6
44		HC-0006100-00	(2)	C9, C10
45		HC-0111022-10	(1)	C11
46		HC-0013600-00	(1)	C12
47		HC-0054700-00	(2)	C13, C16
48		HC-0011600-00	(3)	C14, C17, C18
49		HC-0002900-00	(1)	C15
50		HC-0043200-00	(2)	C19, C20
51		HC-0022400-00	(2)	C23, C24
52		HR-0017024-20	(2)	R1, R3
53		HR-0017010-10	(2)	R2, R41
54		HR-0017010-00	(1)	R4
55		HR-0017012-30	(1)	R5
56		HR-0017022-30	(1)	R6
57		HR-0017010-20	(2)	R7, R17
58		HR-0017010-30	(4)	R8, R9, R14, R15
59		HR-0017020-40	(1)	R10
60		HR-0017039-30	(1)	R11
61		HR-0017033-10	(1)	R12
62		HR-0017051-00	(1)	R13
63		HR-0017010-40	(4)	R16, R18, R39, R40
64		HR-0075909-10	(1)	R19
65		HR-0075255-20	(1)	R20
66		HR-0017082-00	(1)	R21
67		HR-0039012-10	(2)	R22, R23
68		HR-0017020-20	(4)	R24, R28, R101, R102
69		HR-0017047-10	(1)	R27
70		HR-0039033-10	(1)	R29
71		HR-0039027-10	(1)	R30
72		HR-0035022-10	(2)	R33, R34
73		HR-0035012-10	(2)	R35, R36
74		HR-0017013-20	(2)	R103, R104

From the Library of: Diamond Needle Corp

Ref. No.	Note 注記	Part No. 品番	Description	E. C. 変更年月	品名	Amt. Req. 数量
1		M8601-140-0A0	CPU PRINTED CIRCUIT BOARD ASM.		CPU ｷﾊﾞﾝ ｸﾐ	1
2		M2003-140-000	RADIATOR PLATE		ﾎｳﾈﾂﾊﾞﾝ	(1)
3		SL-4031081-SF	SCREW M3 L=10		ﾅﾍﾞｺﾈｼﾞ ｾﾋﾞｽ M3 L=10	(2)
4		WP-0320500-SC	WASHER 3.2X7.0X0.5		ﾋﾗｻﾞｶﾞﾈ ｺｶﾞﾀﾏﾙ M3	(2)
5		NM-6030001-SF	NUT M3		ﾛｯｶｸﾅｯﾄ M3X0.5 ﾚﾝｾﾞ	(2)
6		SL-4030881-SF	SCREW M3 L=8		ﾅﾍﾞｺﾈｼﾞ ｾﾋﾞｽ M3 L=8	(1)
7		HW-2003500-00	ELECTRIC WIRE, YELLOW		ﾋﾞﾆｰﾙﾀﾞﾝｾﾝ 17-0.16 ｷ	(0.1)
8		HT-0006600-00	TRANSISTOR (2SC945Q)		ﾄﾗﾝｼﾞｽﾀ (2SC945Q)	(2)
9		HK-0124000-60	6-POLE PIN HEADER		ﾋﾟﾝﾍｯﾀﾞｰ 6P	(1)
10		HK-0038100-80	8-POLE STRAIGHT PLUG		ｺﾈｸﾀ 8P	(1)
11		E9632-252-F00	34-POLE CONNECTOR		ﾊﾞｰﾁｶﾙﾍｯﾀﾞｰ	(2)
12		HL-0012700-00	IC (SN74LS11N)		IC (SN74LS11N)	(1)
13		HL-0045200-00	IC (SN74LS148N)		IC (SN74LS148)	(2)
14		HL-0009100-00	IC LM339N		IC (LM339N)	(1)
15		HL-0012200-00	IC SN74LS 00N		IC (SN74LS00N)	(1)
16		HL-0056500-00	IC (NE556)		IC (NE556)	(1)
17		HL-0058100-00	IC (SN75453BN)		IC (SN75453BN)	(2)
18		HL-0012800-00	IC (SN74LS14N)		IC (SN74LS14N)	(1)
19		HL-0044200-00	IC (SN74LS90N)		IC (SN74LS90N)	(1)
20		HL-0056700-00	IC (SN75432N)		IC (SN75432N)	(1)
21		HH-0133036-10	THERMISTOR 360 OHM		ｻｰﾐｽﾀｰ 360ｵｰﾑ	(2)
22		HL-0058200-00	CPU (TMP8039P)		IC (TMP8039P)	(1)
23		HL-0056600-00	IC (TD62703P)		IC (TD62703P)	(1)
24		HL-0057800-01	IC (UPD8755AD)		IC (UPD8755AD)	(1)
25		HL-0056900-00	IC (SN74159N)		IC (SN74159N)	(1)
26		HL-0056800-00	IC (SN75478N)		IC (SN75478N)	(1)
27		HG-0023700-00	DIODE ARRAY (MA-430)		ﾀﾞｲｵｰﾄﾞ (MA430)	(2)
28		HL-0058300-00	REGULATOR (SI-3052P)		ｻﾝﾀﾝｼﾚｷﾞｭﾚｰﾀ SI-3052P	(1)
29		HT-0003700-00	TRANSISTOR (2SA495Y)		ﾄﾗﾝｼﾞｽﾀ (2SA495)	(1)
30		HT-0022200-00	TRANSISTOR (2SA1048Y)		ﾄﾗﾝｼﾞｽﾀ 2SA1048	(2)
31		HG-0019600-00	ZENER DIODE (RD6.2EB-B3)		ﾀﾞｲｵｰﾄﾞ (RD6.2EB-B3)	(1)
32		HG-0006100-00	ZENER DIODE RD9.1E		ﾀﾞｲｵｰﾄﾞ	(1)
33		HR-0132010-30	RESISTOR ARRAY 10K OHM 1/8W		ﾃｲｺｳｱﾚｲ 10Kｵｰﾑ 1/8W	(1)
34		HR-0132047-20	RESISTOR 4.7K 1/8W		ﾃｲｺｰｷ 4.7K 1/8W ｱﾚｲ	(1)
35		HR-0132015-30	RESISTOR ARRAY 15K OHM 1/8W		ﾃｲｺｰｱﾚｲ 15Kｵｰﾑ 1/8W	(1)
36		HL-0051400-00	CR ARRAY (L00462A)		IC (L00462A)	(6)
37		HY-0000900-00	QUARTZ CRYSTAL 11MHZ		ｽｲｼｮｳｼﾝﾄﾞｳｼ	(1)
38		HC-0068122-30	CAPACITOR 22000PF 50V		ｺﾝﾃﾞﾝｻ 22000PF 50V	(1)
39		HC-0054600-00	CAPACITOR 0.01MF 50V		ｺﾝﾃﾞﾝｻ 0.01MF 50V ｾﾗﾐｯｸ	(24)
40		EA-9514803-00	HEAD		ﾍｯﾄﾞ	(1)
41		HC-0111033-00	CAPACITOR 33MF 16V		ｺﾝﾃﾞﾝｻ 33UF 16V	(1)
42		HC-0111010-10	CAPACITOR 100MF 16V		ｺﾝﾃﾞﾝｻ 100UF 16V	(2)
43		HC-0011700-00	TANTALUM CONDENSER 0.1/25		ｺﾝﾃﾞﾝｻ 0.MF 35V ﾀﾝﾀﾙ	(1)
44		HC-0006100-00	CAPACITOR 0.22MF 35V		ｺﾝﾃﾞﾝｻ 0.22MF 35V ﾀﾝﾀﾙ	(2)
45		HC-0111022-10	CAPACITOR 220MF 16V		ｺﾝﾃﾞﾝｻ 220UF 16V	(1)
46		HC-0013600-00	CAPACITOR 4700MF 50V		ｺﾝﾃﾞﾝｻ 4700PF 50V ｾﾗﾐｯｸ	(1)
47		HC-0054700-00	CAPACITOR 0.47MF 35V		ｺﾝﾃﾞﾝｻ 0.47MF 35V ﾀﾝﾀﾙ	(2)
48		HC-0011600-00	CAPACITOR 1MF 35V		ｺﾝﾃﾞﾝｻ 1.0MF 35WV ﾀﾝﾀﾙ	(3)
49		HC-0002900-00	CAPACITOR 10MF 16V		ｺﾝﾃﾞﾝｻ 10MF 16V ﾀﾝﾀﾙ	(1)
50		HC-0043200-00	CAPACITOR 15PF 50V		ｺﾝﾃﾞﾝｻ 15PF 50V ｾﾗﾐｯｸ	(2)
51		HC-0022400-00	CAPACITOR 100PF 50V		ｺﾝﾃﾞﾝｻ 100PF 50V ｾﾗﾐｯｸ	(2)
52		HR-0017024-20	RESISTOR 2.4 KILO OHM 1/4W		ﾃｲｺｳｷ 2.4Kｵｰﾑ 1/4W	(2)
53		HR-0017010-10	RESISTOR 100 OHM 1/4W		ﾃｲｺｰｷ 100ｵｰﾑ 1/4 ﾀﾝｿﾋﾏｸ	(2)
54		HR-0017010-00	RESISTOR 10 OHM 1/4W		ﾃｲｺｰｷ 10ｵｰﾑ 1/4W ﾀﾝｿﾋﾏｸ	(1)
55		HR-0017012-30	RESISTOR 12 KILO OHM 1/4W		ﾃｲｺｰｷ 12K 1/4W	(1)
56		HR-0017022-30	CARBON FILM RESISTOR 22K		ﾃｲｺｰｷ 22K 1/4W ﾀﾝｿﾋﾏｸ	(1)
57		HR-0017010-20	RESISTOR 1 KILO OHM 1/4W		ﾃｲｺｰｷ 1K 1/4W ﾀﾝｿﾋﾏｸ	(2)
58		HR-0017010-30	RESISTOR 10 KILO OHM 1/4W		ﾃｲｺｰｷ 10K 1/4W ﾀﾝｿﾋﾏｸ	(4)
59		HR-0017020-40	CARBON FILM RESISTOR 200K		ﾃｲｺｰｷ 200K 1/4W ﾀﾝｿﾋﾏｸ	(1)
60		HR-0017039-30	RESISTOR 39 KILO OHM 1/4W		ﾃｲｺｰｷ 39K 1/4W ﾀﾝｿﾋﾏｸ	(1)
61		HR-0017033-10	RESISTOR 330 OHM 1/4W		ﾃｲｺｰｷ 330ｵｰﾑ 5% 1/4W	(1)
62		HR-0017051-00	RESISTOR 51 OHM 1/4W		ﾃｲｺｰｷ 51ｵｰﾑ 1/4W ﾀﾝｿﾋﾏｸ	(1)
63		HR-0017010-40	CARBON FILM RESISTOR 100K		ﾃｲｺｰｷ 100K 1/4W ﾀﾝｿﾋﾏｸ	(4)
64		HR-0075909-10	RESISTOR 9.09 KILO OHM 1/4W		ﾃｲｺｰｷ 9.09K(+-1%) 1/4W	(1)
65		HR-0075255-20	RESISTOR 25.5 KILO OHM 1/4W		ﾃｲｺｳｷ 25.5K(+-1%) 1/4W	(1)
66		HR-0017082-00	RESISTOR 82 OHM 1/4W		ﾃｲｺｰｷ 82ｵｰﾑ 1/4W ﾀﾝｿﾋﾏｸ	(1)
67		HR-0039012-10	RESISTOR 120 OHM 1W		ﾃｲｺｳｷ 120ｵｰﾑ 1W	(2)
68		HR-0017020-20	RESISTOR 2 KILO OHM 1/4W		ﾃｲｺｰｷ 2K 1/4 ﾀﾝｿﾋﾏｸ	(4)
69		HR-0017047-10	RESISTOR 470 OHM 1/4W		ﾃｲｺｰｷ 470ｵｰﾑ 1/4Wﾀﾝｿﾋﾏｸ	(1)
70		HR-0039033-10	RESISTOR 330 OHM 1W		ﾃｲｺｰｷ 330ｵｰﾑ 1W ｷﾝｿﾞｸ	(1)
71		HR-0039027-10	RESISTOR 270 OHM 1W		ﾃｲｺｰｷ 270ｵｰﾑ 1W	(1)
72		HR-0035022-10	RESISTOR 220 OHM 1/4W		ﾃｲｺｰｷ 220ｵｰﾑ 1/2W ﾀﾝｿ	(2)
73		HR-0035012-10	RESISTOR 120 OHM 1/2W		ﾃｲｺｳｷ 120ｵｰﾑ 1/2W	(2)
74		HR-0017013-20	RESISTOR 1.3 KILO OHM 1/4W		ﾃｲｺｰｷ 1.3K 1/4W ﾀﾝｿﾋﾏｸ	(2)

From the library of: Diamond Needle Corp

Part No. 品番	Page 頁	Ref. No.
EXCLUSIVE PARTS "B" 専用部品"B"		
B2116-019-0A0	3	17
B2526-704-000	3	4
B3538-112-000	5	50
OIL WICK 油心		
CQ-2000000-00	3	18
EXCLUSIVE PARTS "D" 専用部品"D"		
D2611-555-B0B	3	21
D6028-555-B0A	5	48
D6029-555-B0A	3	11
D6043-555-B00	3	12
D6043-555-B00	5	9
D7117-555-BA0	5	65
D7130-555-B0A	5	67
EXCLUSIVE PARTS "E" 専用部品"E"		
EA-9500B01-00	5	17
EA-9500B01-00	5	24
EA-9500B01-00	7	39
EA-9500B01-00	9	31
EA-9514B03-00	11	40
E8523-304-000	9	5
E9602-701-000	9	3
E9611-452-000	7	18
E9616-403-000	5	28
E9632-252-F00	11	11
E9649-302-000	7	25
E9683-901-000	7	46
E9862-201-000	5	27
E9862-201-000	5	42
EXCLUSIVE PARTS "G" 専用部品"G"		
GBR-01233000	7	40
G5066-110-000	5	38
ELECTRON PARTS 電子部品		
HC-0002900-00	11	49
HC-0006100-00	11	44
HC-0011600-00	11	48
HC-0011700-00	11	43
HC-0013600-00	11	46
HC-0022400-00	11	51
HC-0043200-00	11	50
HC-0054600-00	11	39
HC-0054700-00	11	47
HC-0068122-30	11	38
HC-0111010-10	11	42
HC-0111022-10	11	45
HC-0111033-00	11	41
HC-0114068-20	7	47
HC-0115047-20	7	53
HG-0006100-00	11	32
HG-0015400-00	7	50
HG-0019600-00	11	31
HG-0023700-00	11	27
HG-0024700-00	7	52
HG-2672011-2P	7	55
HK-0038100-80	11	10
HK-0124000-60	7	51
HK-0124000-60	11	9
HK-0125300-00	5	23
HK-0126000-90	5	36
HK-0126300-00	5	32
HK-0126300-00	5	40
HK-0126300-30	7	11
HL-0009100-00	11	14
HL-0012200-00	11	15
HL-0012700-00	11	12
HL-0012800-00	11	18
HL-0044200-00	11	19
HL-0045200-00	11	13
HL-0051400-00	11	36
HL-0056500-00	11	16
HL-0056600-00	11	23
HL-0056700-00	11	20
HL-0056800-00	11	26
HL-0056900-00	11	25
HL-0057800-01	11	24
HL-0058100-00	11	17
HL-0058200-00	11	22
HL-0058300-00	11	28
HN-0000500-00	7	27
HP-0012800-00	7	16
HP-0012800-00	7	21
HP-0012900-00	7	17
HP-0012900-00	7	22
HP-1A43PGC-12	3	9
HP-1A43PGC-12	7	23
HP-1B43PEC-13	7	26
HR-0017010-00	11	54
HR-0017010-10	11	53
HR-0017010-20	11	57
HR-0017010-30	11	58
HR-0017010-40	11	63
HR-0017012-30	11	55
HR-0017013-20	11	74
HR-0017020-20	11	68
HR-0017020-40	11	59
HR-0017022-30	11	56
HR-0017024-20	11	52
HR-0017033-10	11	61
HR-0017039-30	11	60
HR-0017047-10	11	69
HR-0017051-00	11	62
HR-0017082-00	11	66
HR-0035012-10	11	73
HR-0035022-10	11	72
HR-0039012-10	11	67
HR-0039027-10	11	71
HR-0039033-10	11	70
HR-0042030-20	7	54
HR-0042062-10	7	49
HR-0043020-S0	7	48
HR-0075255-20	11	65
HR-0075909-10	11	64
HR-0132010-30	11	33
HR-0132015-30	11	35
HR-0132047-20	11	34
HR-0133036-10	11	21
HT-0003700-00	11	29
HT-0006600-00	11	8
HT-0022200-00	11	30
HW-0001200-30	5	41
HW-0001400-50	5	26
HW-2003500-00	11	7
HW-5#18S16-A8	3	8
HW-5L12S22-28	5	7
HW-5L12S22-28	5	19
HX-0002100-00	7	36
HX-0005400-00	9	13
HX-0005500-0A	7	41
HX-0005500-0B	7	35
HX-0005500-00	5	20
HX-0005600-0A	7	33
HX-0005600-00	9	1
HY-0000900-00	11	37
EXCLUSIVE PARTS "M" 専用部品"M"		
MA0-11532000	9	29
MAT-00504000	3	32
MAT-00505000	3	36
MAT-005060A0	3	29
MAT-00509000	3	19
MAT-01266A00	5	49
MAT-01266000	5	60
MAT-015010A0	3	25
MAT-01501000	3	26
MAT-01502000	3	40
MAT-016001AA	1	4
MAT-016001A0	1	1
MAT-016002AA	1	5
MAT-016002A0	1	2
MAT-016003AA	1	6
MAT-016003A0	1	3
MAT-016004AA	1	10
MAT-016004A0	1	7
MAT-016005AA	1	11
MAT-016005A0	1	8
MAT-016006AA	1	12
MAT-016006A0	1	9
MAT-01601000	3	24
MAT-01602000	5	45
MAT-016110A0	3	50
MAT-016120A0	3	54
MAT-01613000	3	52
MAT-01614000	3	53
MAT-01615000	3	55
MAT-016210A0	3	7
MAT-016210B0	3	6
MAT-01622000	3	15
MAT-01623000	3	1
MAT-016310A0	5	1
MAT-01631000	5	6
MAT-01632000	5	4
MAT-01633000	5	10
MAT-016410A0	5	39
MAT-016430A0	5	43
MAT-016440A0	5	29
MAT-016460A0	5	25
MAT-01646000	5	30
MAT-01647000	5	35
MAT-016510A0	5	14
MAT-01651000	5	21
MAT-01652000	5	15
MAT-01653000	5	16
MAT-016610A0	3	56
MAT-016610B0	5	68
MAT-01662000	5	12
MAT-01663000	5	13
MAT-80102T00	3	27
MAT-80105T00	3	33
MAT-80106T00	3	35
MAT-80114T00	3	13
MAT-80170T00	5	18
MAT-80158T00	7	24
MAT-81102T00-A	3	38
MAT-81104T0B	3	47
MAT-81104T00	3	44
MAT-81105T00	3	45
MAT-81106T00	3	46
MAT-81123T00-A	5	8
MAT-81124T00-A	5	5
MAT-81125T00-A	5	3
MAT-81129T00	5	34
MAT-81131T00	3	10
MAT-81131T00	5	47
MAT-81132T00	3	2
MAT-81133T00	5	55
MAT-81134T00	5	57
MAT-81136T00	5	61
MAT-81137TA0	5	63
MAT-81163T00	9	30
M0001-140-AA0	7	1
M0001-140-BA0	7	2
M0001-140-CA0	7	3
M1001-140-000	7	43
M1002-140-000	7	44
M1003-140-000	7	5
M2001-140-A00	9	22
M2001-140-B00	9	23
M2003-140-000	11	2
M2004-140-A00	7	9
M2004-140-B00	7	10
M2005-140-000	7	12
M2006-140-000	9	6
M8501-140-AA0	7	14
M8501-140-BA0	7	15
M8502-140-AA0	7	6
M8502-140-BA0	7	7
M8504-140-0A0	9	11
M8505-140-0A0	9	12
M8506-140-0A0	9	10
M8507-140-0A0	9	16
M8508-140-0A0	9	15
M8509-140-0A0	9	2
M8510-140-0A0	9	4
M8511-140-0A0	9	24
M8512-140-0A0	9	19
M8513-140-0A0	7	20
M8514-140-0A0	7	29
M8515-140-0A0	9	28
M8516-140-0A0	7	28
M8517-140-0A0	9	27
M8518-140-0A0	9	26
M8519-140-0A0	7	31
M8520-140-0A0	9	18
M8521-140-0A0	9	17
M8522-140-0A0	7	30
M8601-140-0A0	11	1
M8602-140-0A0	7	45
M8603-140-0A0	9	8
NUT ナット		
NM-6030001-SF	11	3
NM-6060001-SE	5	66
NM-6060003-SC	5	64
NM-6080721-SE	5	58
NM-6092519-SN	9	14
NS-6090310-SP	3	43
SNAP RING 止メ輪		
RE-0300000-K0	3	14
SCREW ネジ		
SD-0500481-TP	7	31
SL-4030881-SF	7	13
SL-4030881-SF	7	19
SL-4030881-SF	7	34
SL-4030881-SF	9	20
SL-4030881-SF	9	25
SL-4030881-SF	11	6
SL-4030891-SC	7	42
SL-4031081-SF	7	8
SL-4031081-SF	9	21
SL-4031081-SF	11	3
SL-4031281-SF	7	37
SL-4040881-SF	7	32
SL-4851481-SF	7	38
SM-2860601-SC	5	31
SM-4030401-SC	5	2
SM-4030411-SB	5	52
SM-4030601-SF	7	4
SM-4030601-SF	9	7
SM-4030601-SN	3	60
SM-4031201-SB	5	54
SM-4031201-SN	3	57
SM-4031401-SC	5	22
SM-4040601-SB	3	3
SM-4041001-SB	3	16
SM-4860501-SC	5	11
SM-4860501-SC	9	9
SM-9060813-SE	5	56
SM-9060813-SE	5	62
SM-9081423-SE	5	59
SS-1110840-SP	3	58
SS-3060410-SP	3	37
SS-3090710-TP	5	33
SS-3090710-TP	5	37
SS-4080610-SP	3	28
SS-4080610-SP	3	48
SS-4090615-SP	3	20
SS-4090815-SP	3	51
SS-5060310-SP	5	44
SS-5090610-SP	3	41
SS-6090630-SP	3	5
SS-6090810-SP	3	30
SS-6090810-SP	3	42
SS-6121010-SP	3	39
SS-7080520-SP	5	46
SS-7090850-SP	3	22
SS-7110840-SP	3	62
SS-9151630-CP	3	23

From the Library of: Diamond Needle Corp

NUMERICAL INDEX OF PARTS

索 引

Part No. 品番	Page 頁	Ref. No.
WASHER		座金
WP-0320500-SC	11	4
WP-0330500-HB	5	53
WP-0330500-0E	3	49
WP-0330500-0E	3	59
WP-0330501-SB	5	51
WP-0510516-SD	3	34
EXCLUSIVE PARTS		専用部品
118-04804	3	61

Part No. 品番	Page 頁	Ref. No.

Part No. 品番	Page 頁	Ref. No.

Part No. 品番	Page 頁	Ref. No.

From the library of: Diamond Needle Corp